PCB TERMINAL BLOCKS

3.81mm Pitch Screwless Pluggable Terminal

- 2-20 pole solid block
- Pluggable female connectors
- Mates with open & closed headers
- Horizontal and vertical female plug styles
- Polarised mouldings
- Moulded in green UL94-V0 flame retardant PA
- 0.2-1.5mm^2 (30-16AWG) solid & stranded cable
- c UL us, & approved

CSTB92VE

SPECIFICATION	
Rating	*10A/200V* *UL=10A/300V, VDE&IMQ=10A/200V*
Dielectric strength	*≥2.5kV*
Impulse withstand voltage	*4kV*
Working temperature	*160°C*
Moulding	*UL94-V0 flame retardant PA*
Clamp/spring	*Nickel copper flash brass*

TYPE NO.	POLES	LENGTH
CSTB92VE/2	2	7.62mm
CSTB92VE/3	3	11.43mm
CSTB92VE/4	4	15.24mm
CSTB92VE/5	5	19.05mm
CSTB92VE/6	6	22.86mm
CSTB92VE/7	7	26.67mm
CSTB92VE/8	8	30.48mm
CSTB92VE/9	9	34.29mm
CSTB92VE/10	10	38.10mm
CSTB92VE/11	11	41.91mm

TYPE NO.	POLES	LENGTH
CSTB92VE/12	12	45.72mm
CSTB92VE/13	13	49.53mm
CSTB92VE/14	14	53.34mm
CSTB92VE/15	15	57.15mm
CSTB92VE/16	16	60.96mm
CSTB92VE/17	17	64.77mm
CSTB92VE/18	18	68.58mm
CSTB92VE/19	19	72.39mm
CSTB92VE/20	20	76.20mm
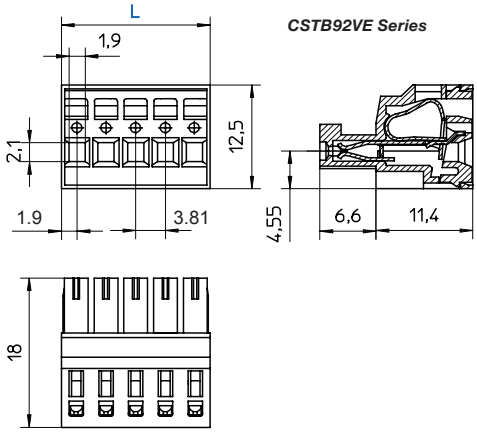
CSTB92VE Series